UNIVERSITY OF CALIFORNIA
UC RIVERSIDE

Identity Management at UCR

Andrew Tristán
Computing & Communications

The Big Picture

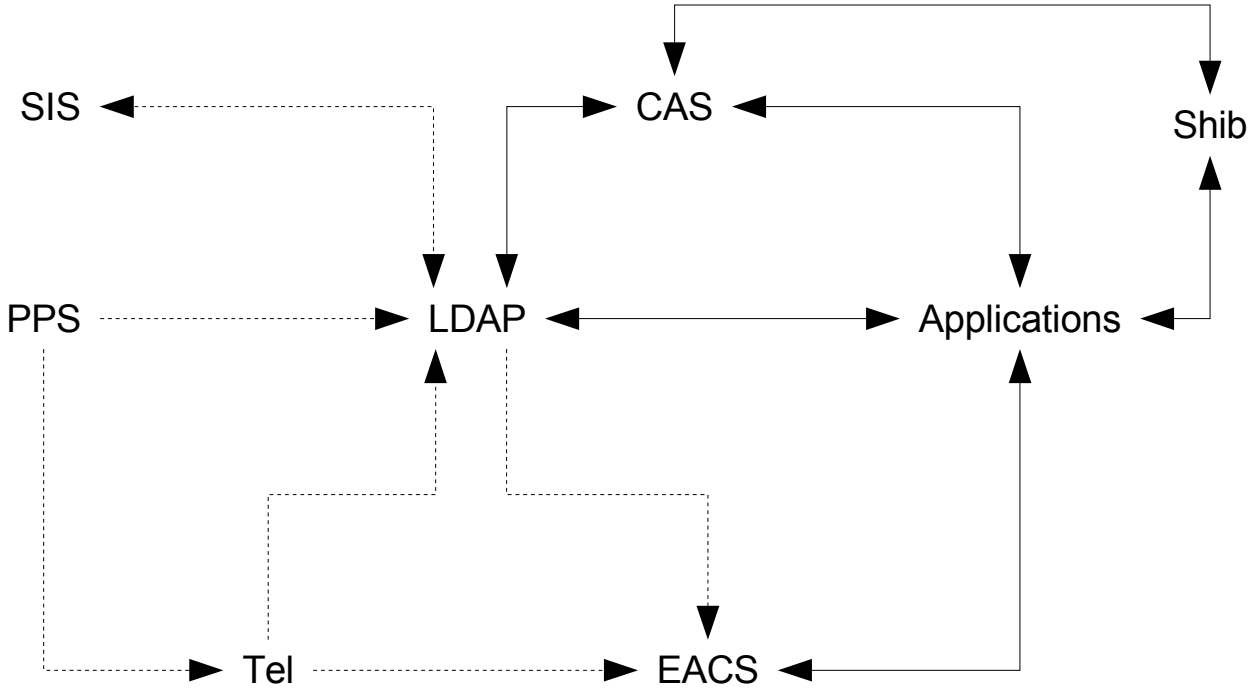

UNIVERSITY OF CALIFORNIA
UC RIVERSIDE

Students

Apply → SIR → Register → Graduate

Applicant → SIS

application id	student id
employee id	name
perm pin	birth date
department	college
address	telephone
privacy flag	enrollment status
class standing	

→ LDAP

- eduPersonAffiliation
- ucrPerson
- cn, gn, sn, etc
- userPassword
- street
- telephoneNumber
- ucrCid
- ucrApplicationId
- ucrUniversityId
- ucrPrivacyCode
- ucrPermanentPin
- ucrBirthDate
- ucrDepartment
- ucrCollege

UNIVERSITY OF CALIFORNIA
UC RIVERSIDE

Students

Apply → SIR → Register → Graduate

Applicant → SIS

uid
mail

application id
employee id
perm pin
department
address
privacy flag
class standing

student id
name
birth date
college
telephone
enrollment status

→ LDAP

eduPersonAffiliation
ucrPerson
cn, gn, sn, etc
userPassword
street
telephoneNumber
ucrCid
ucrApplicationId
ucrUniversityId
ucrPrivacyCode
ucrPermanentPin
ucrBirthDate
ucrDepartment
ucrCollege
uid (net id)
mail

UNIVERSITY OF CALIFORNIA
UC RIVERSIDE

Students

Apply → SIR → Register → Graduate

Applicant → SIS

uid
mail

application id
employee id
perm pin
department
address
privacy flag
class standing

student id
name
birth date
college
telephone
enrollment status

→ LDAP

eduPersonAffiliation
ucrPerson
cn, gn, sn, etc
userPassword
street
telephoneNumber
ucrCid
ucrApplicationId
ucrUniversityId
ucrPrivacyCode
ucrPermanentPin
ucrBirthDate
ucrDepartment
ucrCollege
uid
mail
ucrAccount
ucrLastEnrolled

UNIVERSITY OF CALIFORNIA
UC RIVERSIDE

Students

Apply → SIR → Register → Graduate

Applicant → SIS

uid
mail

application id	student id
employee id	name
perm pin	birth date
department	college
address	telephone
privacy flag	enrollment status
class standing	grad date

→ LDAP

eduPersonAffiliation
ucrPerson
cn, gn, sn, etc
userPassword
street
telephoneNumber
ucrCid
ucrApplicationId
ucrUniversityId
ucrPrivacyCode
ucrPermanentPin
ucrBirthDate
ucrDepartment
ucrCollege
uid (net id)
mail
ucrLastEnrolled

UNIVERSITY OF CALIFORNIA
UC RIVERSIDE

Students

Lapse

Applicant → SIS

uid
mail

application id
employee id
perm pin
department
address
privacy flag
class standing

student id
name
birth date
college
telephone
enrollment status

SIS → LDAP

eduPersonAffiliation
ucrPerson
cn, gn, sn, etc
userPassword
street
telephoneNumber
ucrCid
ucrApplicationId
ucrUniversityId
ucrPrivacyCode
ucrPermanentPin
ucrBirthDate
ucrDepartment
ucrCollege
uid (net id)
ucrLastEnrolled

Employees

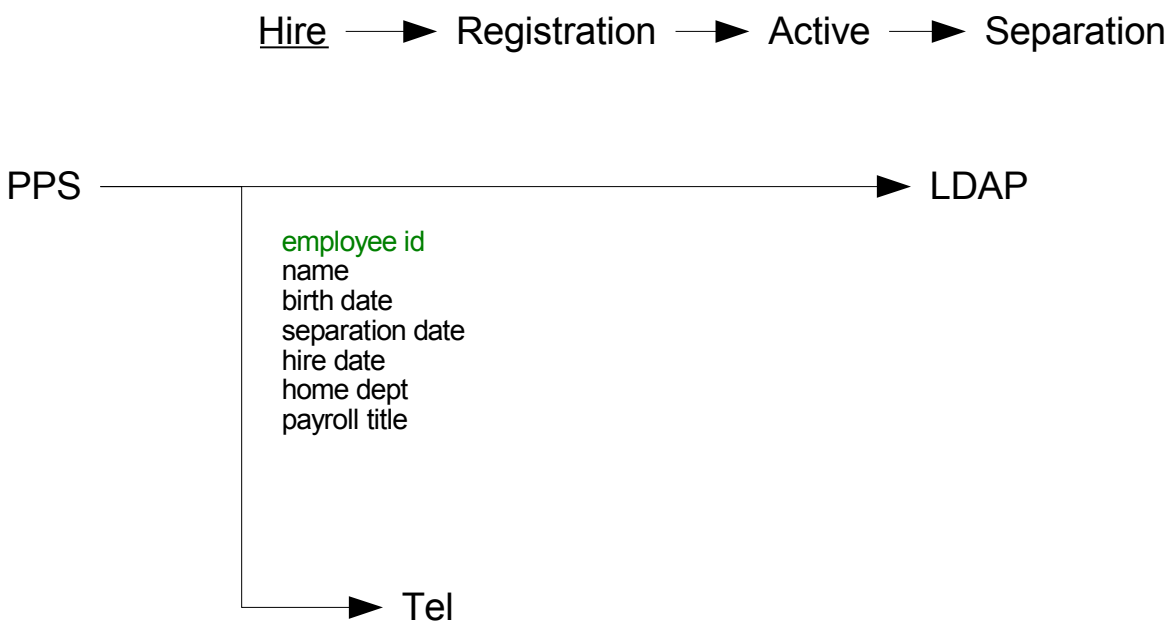
Hire
Registration
Active
Separation
PPS
LDAP
employee id
name
birth date
separation date
hire date
home dept
payroll title
Tel

Employees

Hire → Registration → Active → Separation

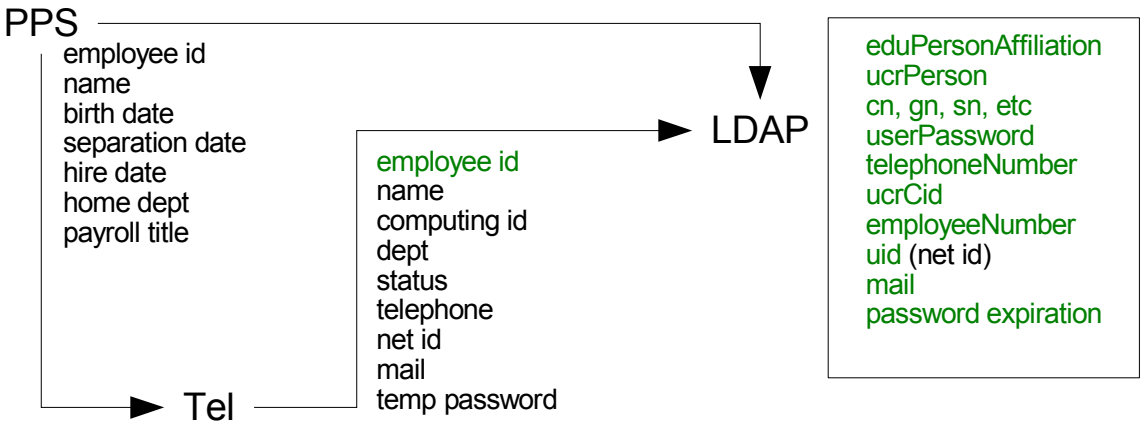

UNIVERSITY OF CALIFORNIA
UC RIVERSIDE

Employees

Hire → Registration → Active → Separation

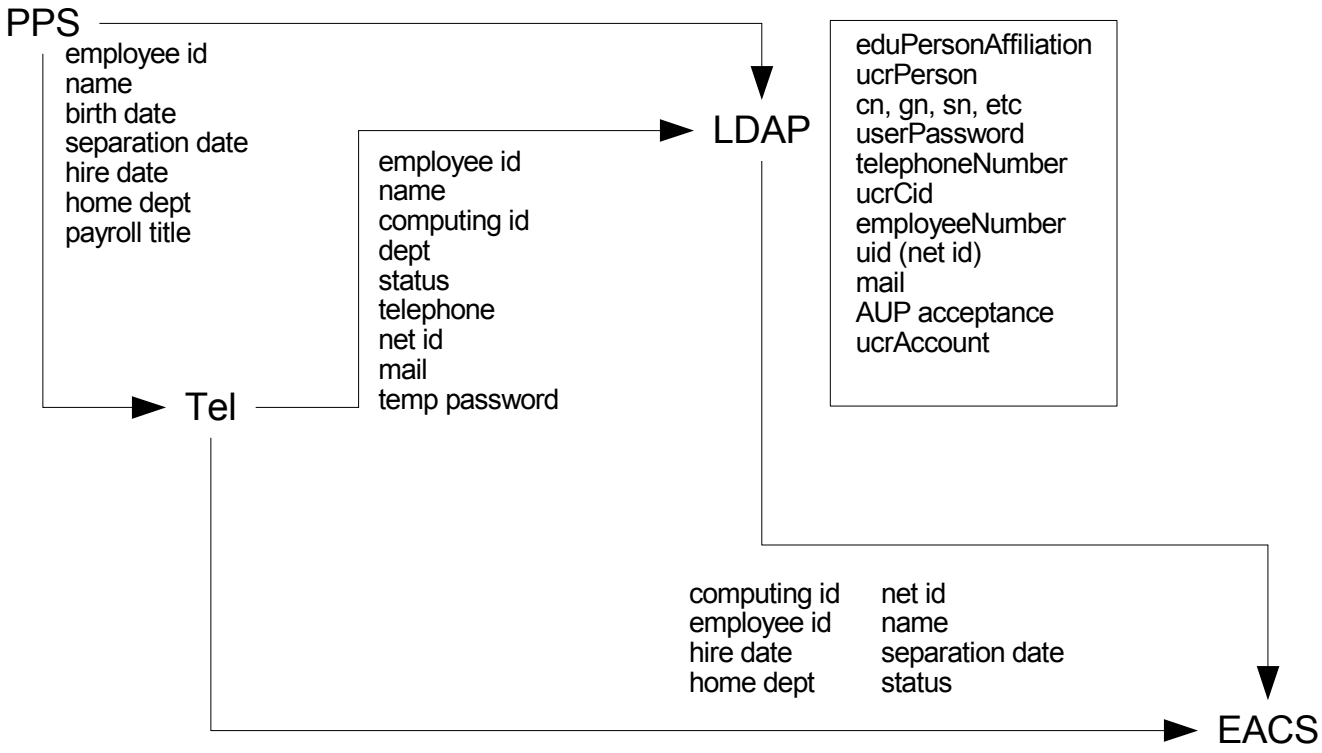

Employees

Hire → Registration → Active → Separation

PPS

employee id
name
birth date
separation date
hire date
home dept
payroll title

→ LDAP

Archived

eduPersonAffiliation
ucrPerson
cn, gn, sn, etc
userPassword
telephoneNumber
ucrCid
employeeNumber
uid (net id)
mail
AUP acceptance

→ Tel

inactive